NOTE:
PENSTOCKS SHALL BE PROVIDED WITH NON-RISING STEM SPINDLES. SPINDLES SHALL BE ADEQUATELY SUPPORTED OVER THEIR LENGTH. SQUARE CAP ON SPINDLE TO TERMINATE BETWEEN 100-200mm BELOW COVER LEVEL.

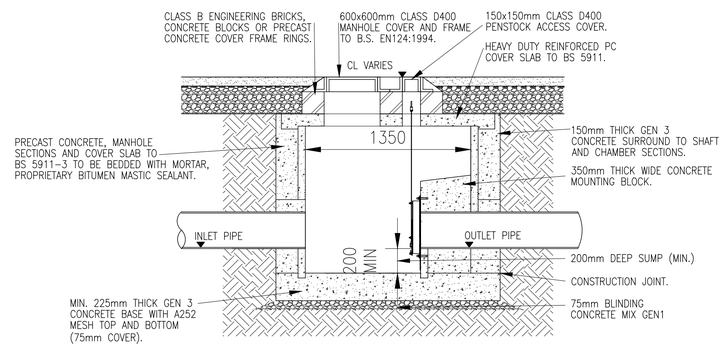

TYPICAL PENSTOCK MANHOLE DETAIL
SCALE 1:25

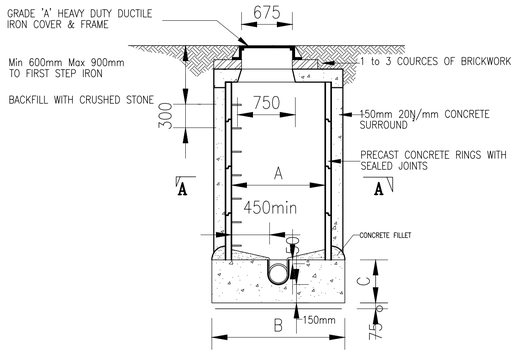

SECTIONAL ELEVATION B-B

MANHOLE SIZES

Sewer Dia (D mm)	Chamber Dia (A mm)	Insitu Base Ext Dia (B mm)	Insitu Base Nom. Depth (C mm)
150	1050	1550	500
225	1200	1700	500
300	1200	1700	550
375	1200	1700	650
450	1350	1850	750
525	1350	1850	800
600	1350	1850	900
675	1350	1850	1000
750	1500	2000	1100
825	1500	2000	1150
900	1800	2330	1250
975	1800	2330	1350
1050	1800	2330	1400
1125	1800	2330	1500

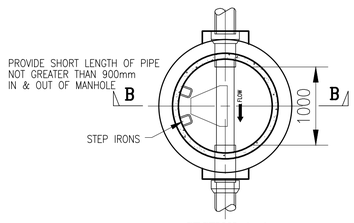

SECTION A-A
PC CONCRETE CIRCULAR MANHOLES

NOTE:

FOR TERMINAL AND STRAIGHT THROUGH MANHOLES ONLY THE FOLLOWING APPLIES: CHAMBER DIAMETER

(A.) WHERE DEPTH TO INVERT DOES NOT EXCEED 1.4 METRES, 900MM MILLIMETERS DIAMETER CHAMBER RINGS SHALL BE USED

(B.) WHERE DEPTH TO INVERT LEVEL DOES NOT EXCEED 2.4 METRES, 1050 MILLIMETERS DIAMETER, CHAMBER RINGS SHALL BE USED.

IF THE SEWER DIAMETER IS BETWEEN THE TWO FIGURES SHOWN ABOVE THEN THE SIZES RELATIVE TO THE LARGER DIAMETER WILL APPLY.

PC CONCRETE CIRCULAR MANHOLES
N.T.Scale

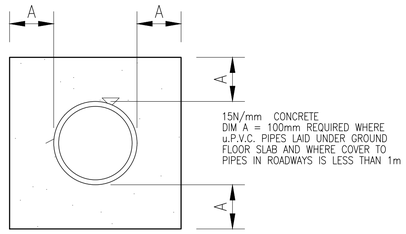

Concrete Surround

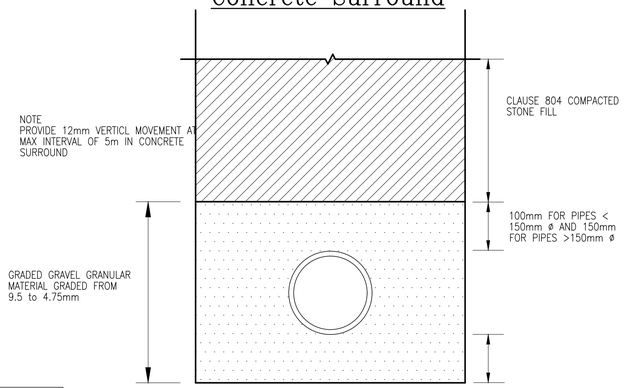

Granular Bedding
FOR CONCRETE & uPVC FLEXIBLE PIPES

SEWERS
TYPICAL PIPE BEDDING DETAILS
N.T.Scale

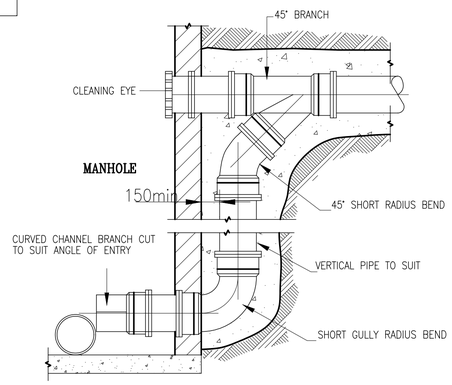

BACKDROP MANHOLE DETAIL
N.T.Scale

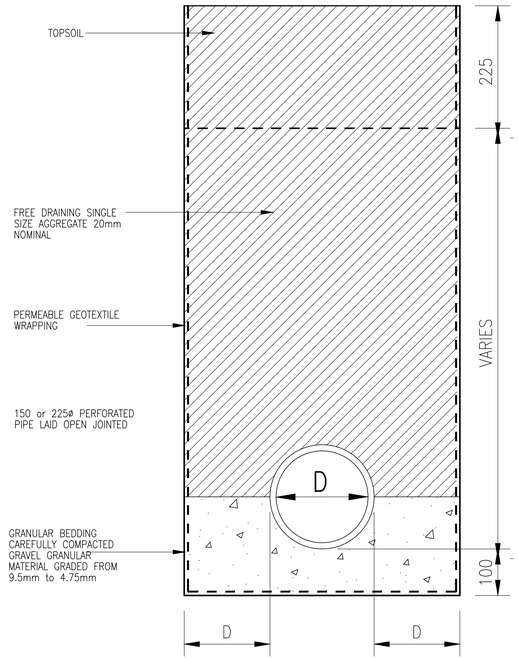

TYPICAL FRENCH DRAIN BEDDING DETAILS
N.T.Scale

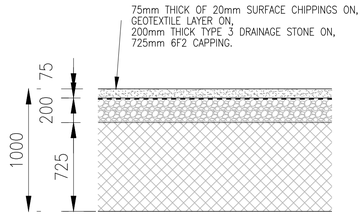

Typical Section Through Platform Areas

Scale 1:25

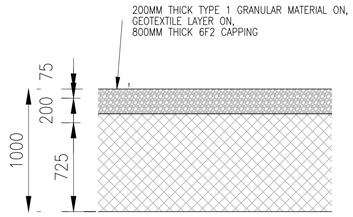

Typical Section Through Access Road Areas

Scale 1:25

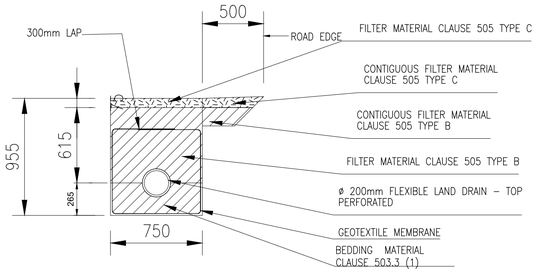

TYPICAL FILTER DRAIN DETAIL
Scale 1:25

JENNINGS O'DONOVAN
an RSK company

© COPYRIGHT OF
JENNINGS O'DONOVAN AND PARTNERS LIMITED
FINISKLIN
SLIGO
IRELAND
Tel (+353) 719 161 416
Email. info@jodireland.com
www.jodireland.com
@JOD_Sligo Jennings O'Donovan & Partners Jennings O'Donovan

NOTES:
1 FIGURED DIMENSIONS ONLY TO BE TAKEN FROM THIS DRAWING.
2 ALL DRAWINGS TO BE CHECKED BY THE CONTRACTOR ON SITE.
3 ENGINEER TO BE INFORMED OF ANY DISCREPANCIES BEFORE ANY WORK COMMENCES.
4 THIS DRAWING TO BE READ IN CONJUNCTION WITH ALL OTHER RELEVANT DRAWINGS AND SPECIFICATIONS.

THIS DRAWING IS NOT TO BE USED AS A CONSTRUCTION DRAWING.

Rev.	Date	Amendments	D	C	A

Client
CONSTANT ENERGY LTD

Project
TIRAWLEY WIND FARM
CO.MAYO

Title
BESS-
DRAINAGE DETAILS
SHEET 1

Issue Details

Designed: JOD	Information	
Drawn: JB	Approval	X
Checked: DT/MG	Tender	
Approved: DK	Construction	
Scale: As shown (A1)	Record	

Office Use Only
Drawing Number: 6289-PL-2007
Date: APRIL 2026
Rev.